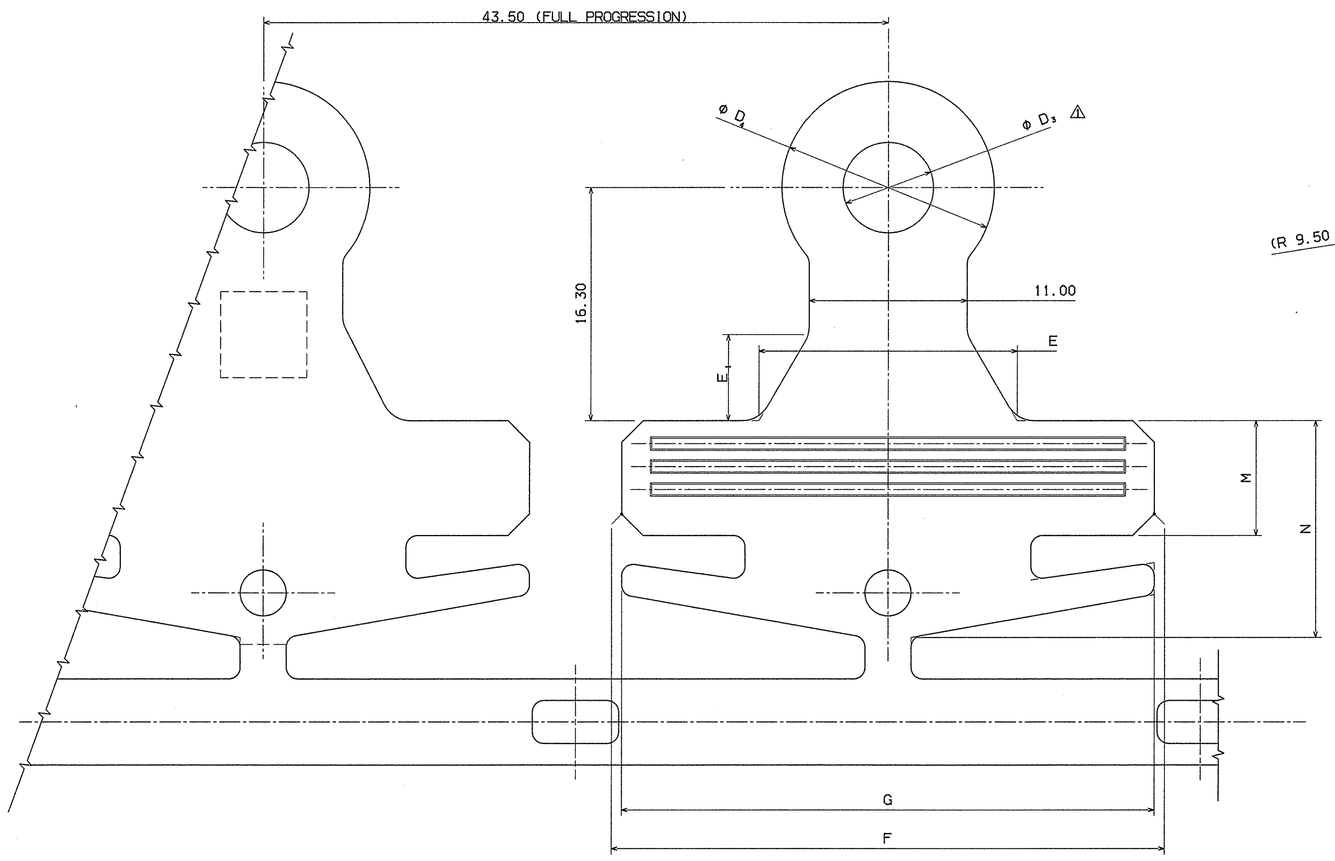

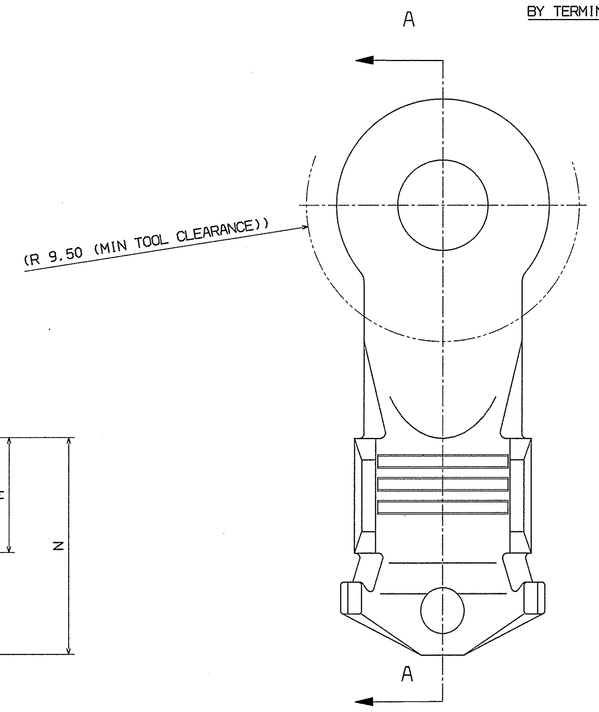

REFERENCE DIMENSIONAL BEND ONLY
EYELET BENT IN APPLICATOR OR SECONDARY DIE
FOR 7009-1968-02 & 7009-1971-02. SEE
HARNESS DRAWING FOR SPECIFIC BEND ANGLE.
APPLICATIONS REQUIRING BEND ANGLES OTHER THAN
THOSE INDICATED ON THIS DRAWING MUST BE APPROVED
BY TERMINAL MANUFACTURER.

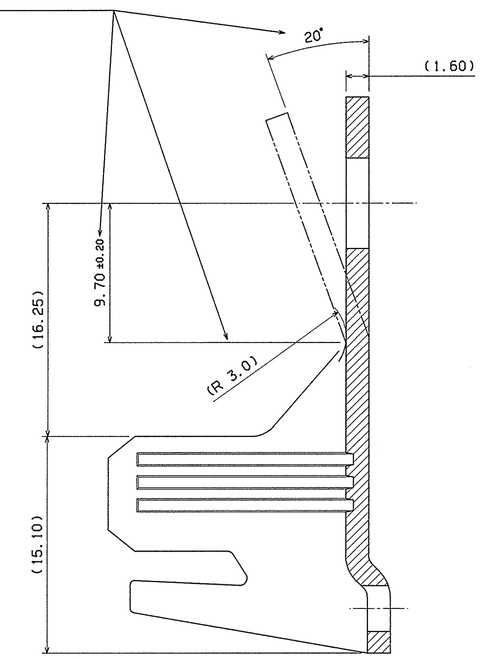

SECTION A-A

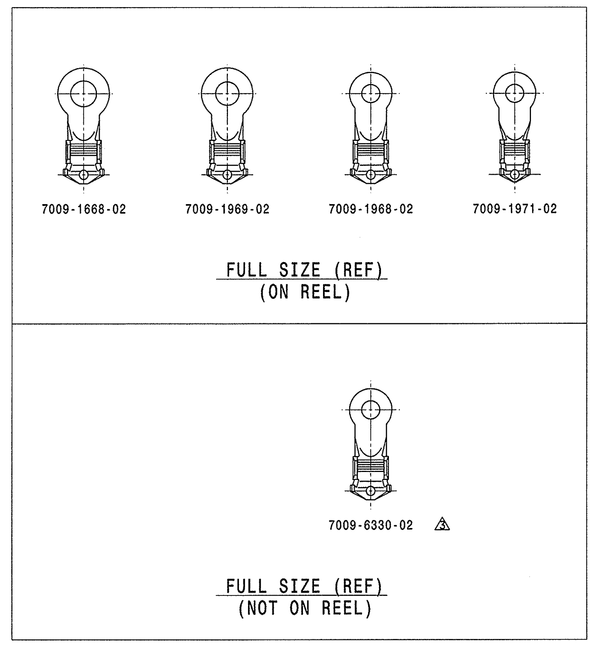

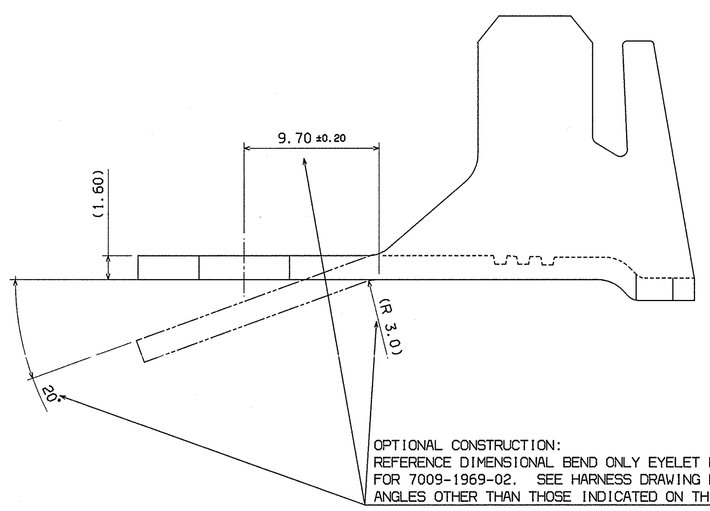

OPTIONAL CONSTRUCTION:
REFERENCE DIMENSIONAL BEND ONLY EYELET BENT IN APPLICATOR OR SECONDARY DIE
FOR 7009-1969-02. SEE HARNESS DRAWING FOR SPECIFIC BEND ANGLE. APPLICATIONS REQUIRING BEND
ANGLES OTHER THAN THOSE INDICATED ON THIS DRAWING MUST BE APPROVED BY THE TERMINAL MANUFACTURER.

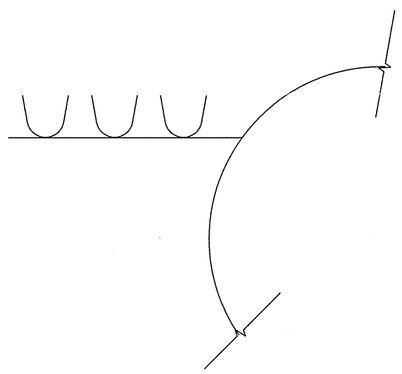

△3 TERMINAL TO BE SUPPLIED ON PANCAKE STYLE REEL TO UNWIND IN DIRECTION SHOWN (GRIP ON NEAR SIDE) FOR PART NUMBERS (7009-1668-02, 7009-1969-02, 7009-1968-02 AND 7009-1971-02)

NOTES:

1) MATERIAL: ASTM B465 UNS-C19700, OLIN C197

2) FINISH: PRE TIN PLATE (t = 1.02 - 2.03 µm MINIMUM)

3) THICKNESS: 1.667 - 1.590 mm; HARDNESS: FULL HARD
TENSILE: 414 - 483 MPa

△4 4) TERMINALS TO BE SUPPLIED ON A PANCAKE REEL (IF APPLICABLE) WITH AN OUTSIDE DIAMETER OF 762 mm. (30 IN.)

△2

YAZAKI PART NO.	ON REEL	D_4	D_3	N	M	G	F	E_1	E	SAE WIRE GAUGE (REF)
7009-1969-02	YES	18.00±0.1	8.15±0.1	15.10 $^{+0.25}_{0}$	8.00	37.05±0.15	37.10±0.15	6.00	18.00	2, 4 20-35 mm² △2
7009-1968-02	YES	14.80±0.1	6.30±0.1							
7009-6330-02	NO									
7009-1668-02	YES	18.00±0.1	9.00±0.1							
7009-1971-02	YES	14.80±0.1	6.30±0.1	15.10 $^{+0.25}_{0}$	8.00	24.55±0.15	28.00±0.15	6.80	10.10	6, 8

OPTIONAL CONSTRUCTION:
REFERENCE DIMENSIONAL BEND ONLY
EYELET BENT IN APPLICATOR OR SECONDARY DIE
FOR 7009-1968-02 & 7009-1971-02. SEE HARNESS DRAWING
FOR SPECIFIC BEND ANGLE. APPLICATIONS REQUIRING BEND
ANGLES OTHER THAN THOSE INDICATED ON THIS DRAWING
MUST BE APPROVED BY THE TERMINAL MANUFACTURER.

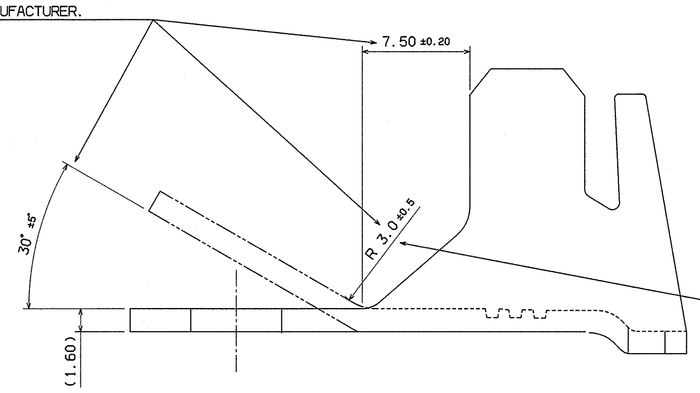

1.2 mm MINIMUM RADIUS 2.5 ± 0.25mm FROM EACH EDGE OF TERMINAL IS ALLOWED DUE TO TERMINAL U-UP INTERFERENCE AT THE BEND.

LET	DATE	REVISION RECORD	NO.	CHKD
△4	08/26/16	ADDED 7009-6330-02, ON REEL COLUMN, FULL SIZE(REF)	C16-A600	RW
△3	11/18/13	ADDED WIRE SIZE TO CHART	C13-A665	T.C.
△1	09/02/09	REMOVED DIMENSION	C09-A640	D.L.
	12/04/02	NEW	C02-B306	D.D.

© 2016 YAZAKI NORTH AMERICA, INC. ALL INFORMATION ON THIS DRAWING IS THE PROPRIETARY AND CONFIDENTIAL PROPERTY OF YNA AND SHALL NOT BE DISCLOSED, DUPLICATED OR DISTRIBUTED WITHOUT THE EXPRESS WRITTEN CONSENT OF YNA. ALL RIGHTS RESERVED.

CUSTOMER
CUSTOMER PART NO. | CUSTOMER DWG NO.
OFFICE YNA | TRIAL PART NO.
VENDOR
VENDOR NO.

GENERAL TOLERANCE						
	10MAX	50MAX	100MAX	250MAX	2500VR	ANGLE	ECCENT
A	±0.15	±0.2	±0.3	±0.5	±0.75	±30'	0.1
(B)	±0.2	±0.3	±0.55	±0.95	±1.4	±30'	0.1
C	±0.3	±0.5	±0.8	±1.4	±2	±30'	0.15
SPECIFIED					MASS	g	

DWG TYPE	DWG SOURCE	DWG DATE	UNIT	SCL	ANGLE
R	NEW	12/04/02	mm	5/1	3

APPROVED	CHECKED	CHECKED	DESIGN	DRAWN
08/31/16			D. DEMARATOS 08/06/94	08/31/16

	PART NUMBER	COMMENT
MATL. SPEC.	SEE NOTE 1)	TREAT. & FIN. SEE NOTE 2)
NAME	EYELET TERMINAL	
PART NO.	7009-1968-02	
DWG NO.	7009-1968-02:R	
	YAZAKI CORPORATION	